Quadrupole Cryostats

T. Nicol
Fermilab – Technical Division

Misc preliminary design criteria

- Single phase MAWP*: 200 psi
- Two phase MAWP: 50 psi
- LN_2 shield MAWP: 100 psi
- Heat load to 4K: 5 W per device (spool, quad, etc.)
- Single phase operating pressure: 16 psig
- Two phase operating pressure: 5 psig

*: MAWP is Maximum Allowable Working Pressure

Misc lengths and cryo service notes

BTeV Quadrupole Cryostat Parameters				
	Warm magnetic length*	**Overall coil length***	**Interconnect configuration**	**Actual slot length****
Q1	96.80	100.57	Tevatron cryo plus single phase, two phase, and shield returns.	138.60
Q2	174.00	177.81	Tevatron cryo plus single phase, two phase, and shield returns.	215.60
Q3	96.80	100.57	Tevatron cryo plus single phase, two phase, and shield returns.	138.60
Q4	79.20	83.01	Tevatron (at least one end).	117.10
Q5	54.20	57.94	Tevatron (at least one end).	96.10

*: From Fred Nobrega

**: From lattice

Lattice printout (page 1)

1 "MAD" Version: 8.17 Run: 04/03/04 09.09.11

Survey of beam line: BTEVMAGS range: #S/#E page 1

pos. no.	ELEMENT element name	occ. no.	SEQUENCE sum(L) [m]	arc [m]	I I I	POSITIONS x [m]	y [m]	z [m]	I I I	ANGLES theta [rad]	phi [rad]	psi [rad]
begin	DIPOLE	9	58.622590	58.622590		-1.711632	0.000000	-94.441629		0.056825	0.000000	0.000000
end	DIPOLE	9	65.023390	65.023390		-1.374047	0.000000	-88.049756		0.048707	0.000000	0.000000
end	B46	1	65.023390	65.023390		-1.374047	0.000000	-88.049756		0.048707	0.000000	0.000000
begin	B47	1	65.023390	65.023390		-1.374047	0.000000	-88.049756		0.048707	0.000000	0.000000
100	MB47	1	65.023390	65.023390		-1.374047	0.000000	-88.049756		0.048707	0.000000	0.000000
begin	QUADB47	1	65.023390	65.023390		-1.374047	0.000000	-88.049756		0.048707	0.000000	0.000000
101	HEAD	1	65.501514	65.501514		-1.350768	0.000000	-87.572200		0.048707	0.000000	0.000000
begin	QB47	1	65.501514	65.501514		-1.350768	0.000000	-87.572200		0.048707	0.000000	0.000000
103	HQB47	1	66.187314	66.187314		-1.317378	0.000000	-86.887213		0.048707	0.000000	0.000000
104	MQB47	1	66.187314	66.187314		-1.317378	0.000000	-86.887213		0.048707	0.000000	0.000000
105	HQB47	2	66.873114	66.873114		-1.283988	0.000000	-86.202226		0.048707	0.000000	0.000000
end	QB47	1	66.873114	66.873114		-1.283988	0.000000	-86.202226		0.048707	0.000000	0.000000
107	BUTT	1	67.464294	67.464294		-1.255205	0.000000	-85.611747		0.048707	0.000000	0.000000
end	QUADB47	1	67.464294	67.464294		-1.255205	0.000000	-85.611747		0.048707	0.000000	0.000000
begin	PACKB47	1	67.464294	67.464294		-1.255205	0.000000	-85.611747		0.048707	0.000000	0.000000
end	PACKB47	1	68.891139	68.891139		-1.185735	0.000000	-84.186595		0.048707	0.000000	0.000000
begin	DIPOLE	10	68.891139	68.891139		-1.185735	0.000000	-84.186595		0.048707	0.000000	0.000000
end	DIPOLE	10	75.291939	75.291939		-0.900049	0.000000	-77.792192		0.040589	0.000000	0.000000
begin	DIPOLE	11	75.291939	75.291939		-0.900049	0.000000	-77.792192		0.040589	0.000000	0.000000
end	DIPOLE	11	81.692739	81.692739		-0.666279	0.000000	-71.395682		0.032471	0.000000	0.000000
130	CBYPU	1	82.130889	82.130889		-0.652054	0.000000	-70.957763		0.032471	0.000000	0.000000
131	DRB47	1	84.700371	84.700371		-0.568635	0.000000	-68.389635		0.032471	0.000000	0.000000
132	CBYPD	1	85.011521	85.011521		-0.558533	0.000000	-68.078649		0.032471	0.000000	0.000000
end	B47	1	85.011521	85.011521		-0.558533	0.000000	-68.078649		0.032471	0.000000	0.000000
begin	B48	1	85.011521	85.011521		-0.558533	0.000000	-68.078649		0.032471	0.000000	0.000000
133	MB48	1	85.011521	85.011521		-0.558533	0.000000	-68.078649		0.032471	0.000000	0.000000
begin	PACKB48	1	85.011521	85.011521		-0.558533	0.000000	-68.078649		0.032471	0.000000	0.000000
end	PACKB48	1	86.438366	86.438366		-0.512210	0.000000	-66.652556		0.032471	0.000000	0.000000
begin	QUADB48	1	86.438366	86.438366		-0.512210	0.000000	-66.652556		0.032471	0.000000	0.000000
142	BUTTQ4	1	86.978746	86.978746		-0.494666	0.000000	-66.112461		0.032471	0.000000	0.000000
begin	QB48	1	86.978746	86.978746		-0.494666	0.000000	-66.112461		0.032471	0.000000	0.000000
144	HQB48	1	87.982046	87.982046		-0.462093	0.000000	-65.109690		0.032471	0.000000	0.000000
145	MQB48	1	87.982046	87.982046		-0.462093	0.000000	-65.109690		0.032471	0.000000	0.000000
146	HQB48	2	88.985346	88.985346		-0.429521	0.000000	-64.106919		0.032471	0.000000	0.000000
end	QB48	1	88.985346	88.985346		-0.429521	0.000000	-64.106919		0.032471	0.000000	0.000000
148	HEADQ4	1	89.412670	89.412670		-0.415647	0.000000	-63.679820		0.032471	0.000000	0.000000
end	QUADB48	1	89.412670	89.412670		-0.415647	0.000000	-63.679820		0.032471	0.000000	0.000000
begin	DIPOLE	12	89.412670	89.412670		-0.415647	0.000000	-63.679820		0.032471	0.000000	0.000000

Triplet layout from lattice

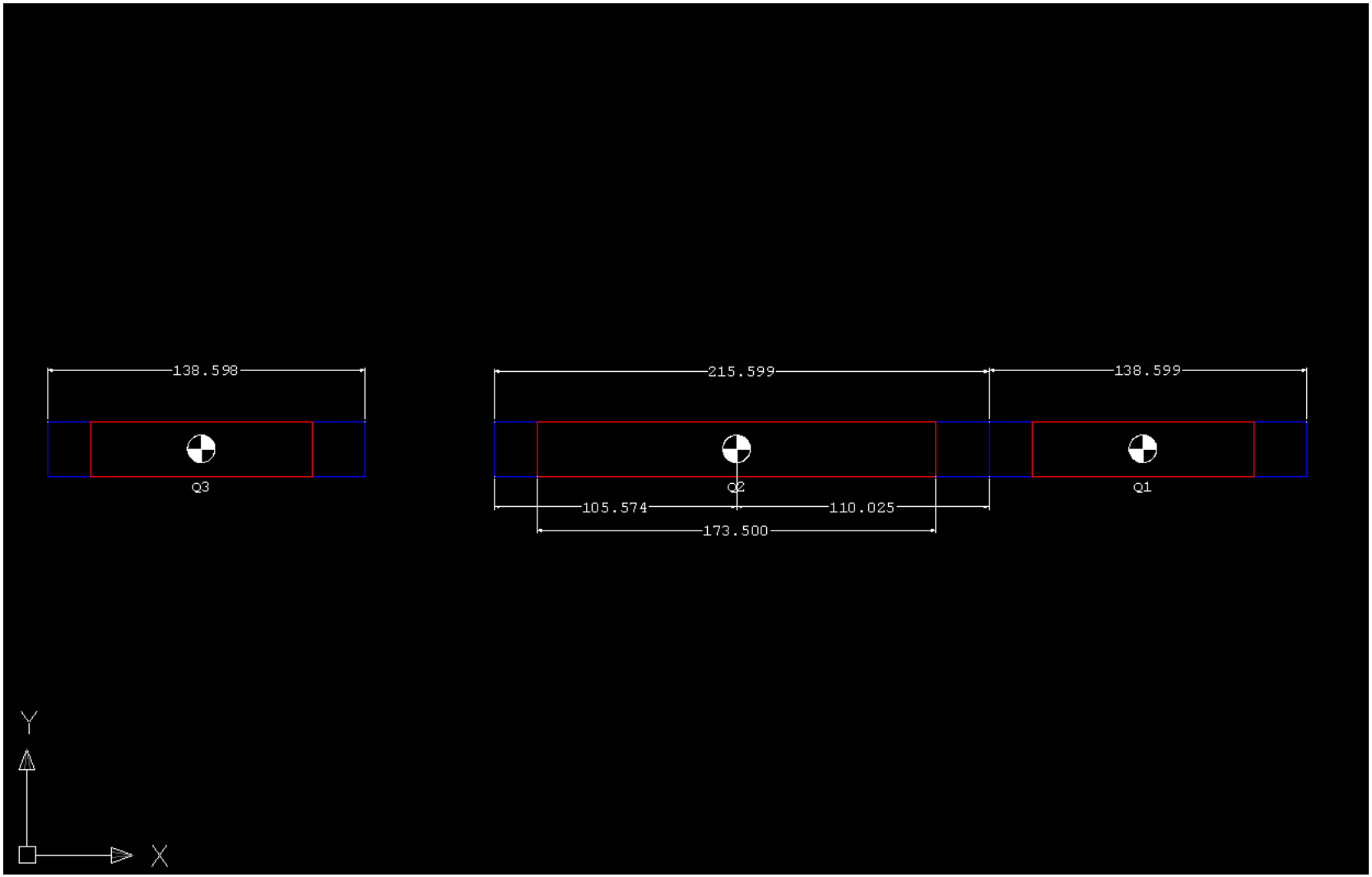

Cryostat cross section

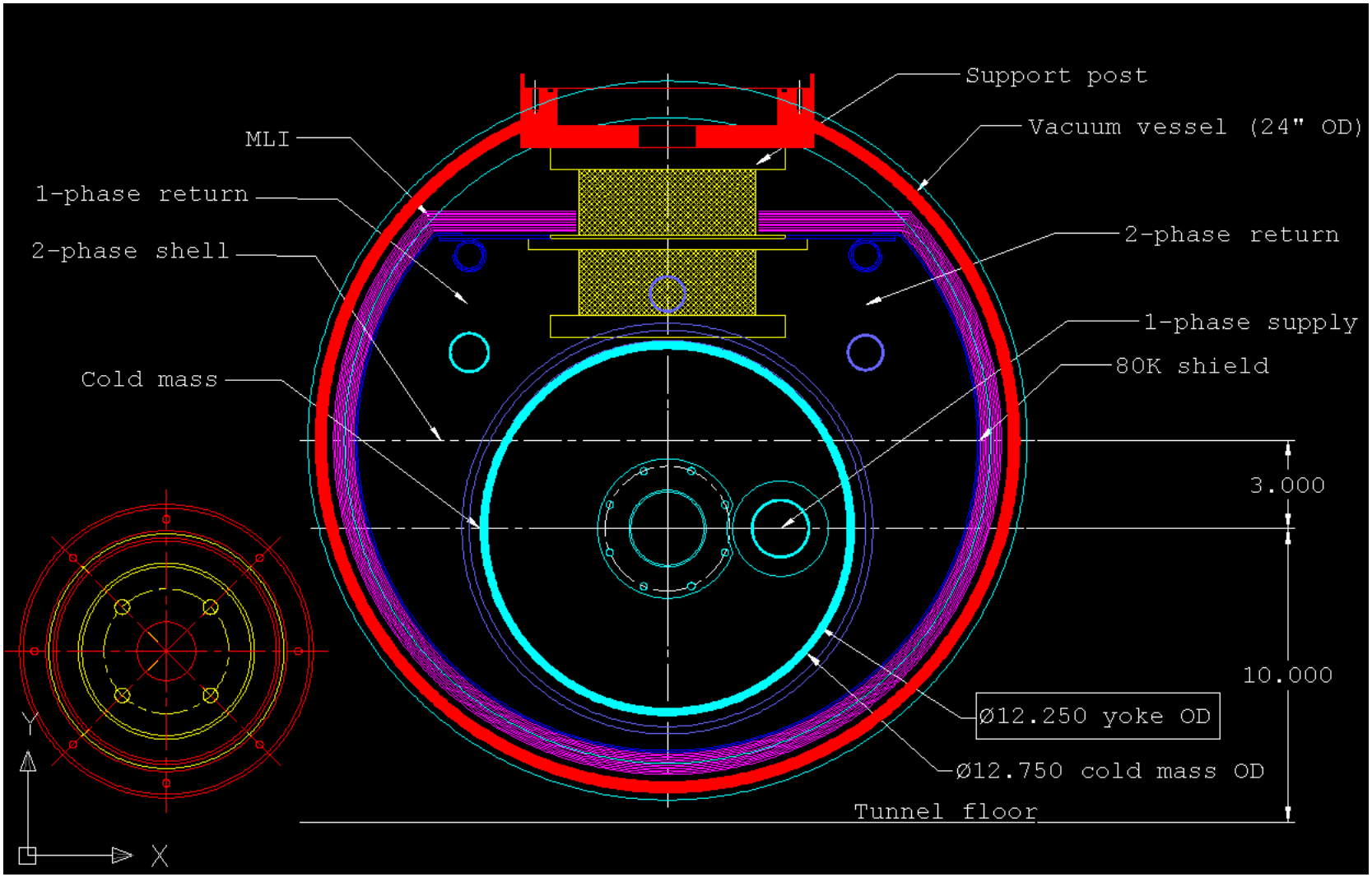

Cryostat solid model cross section

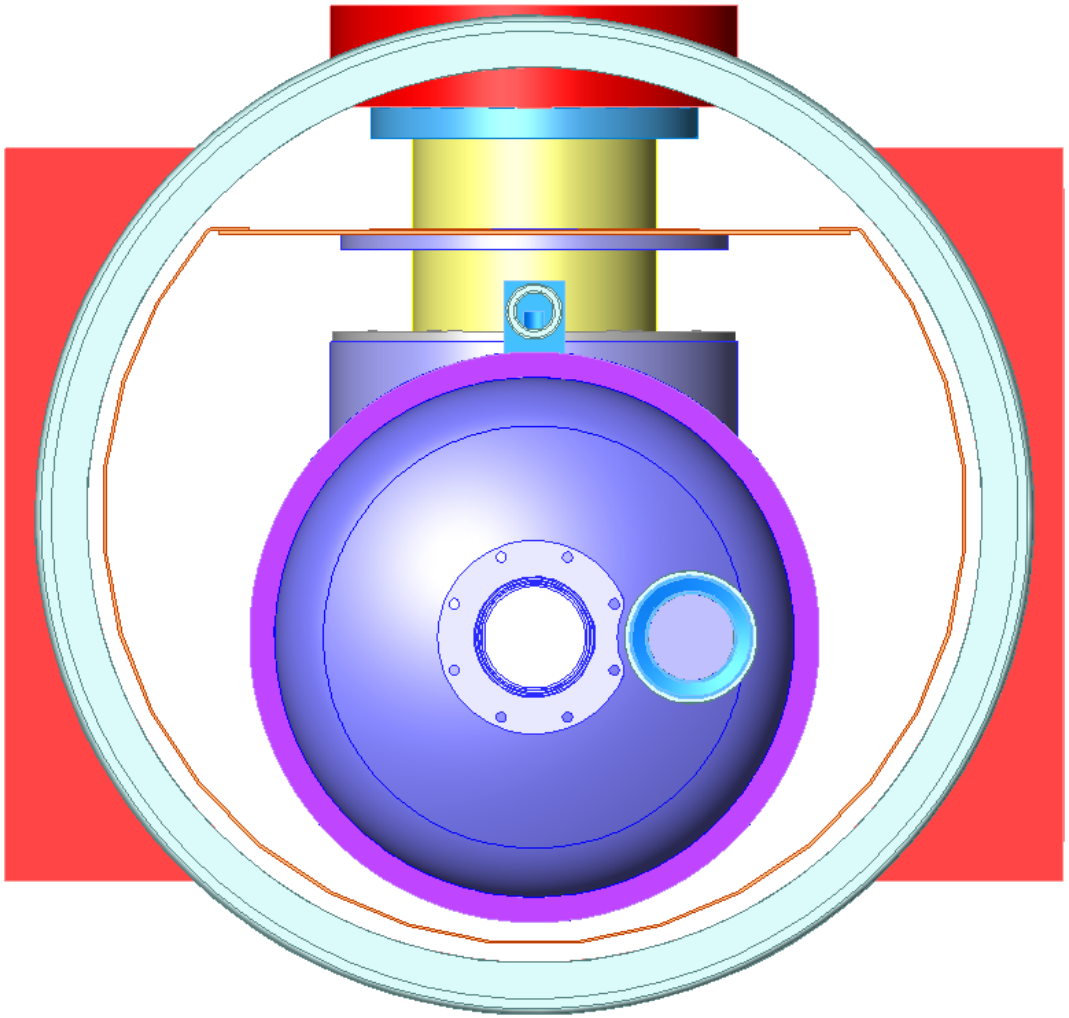

Q2 isometric view

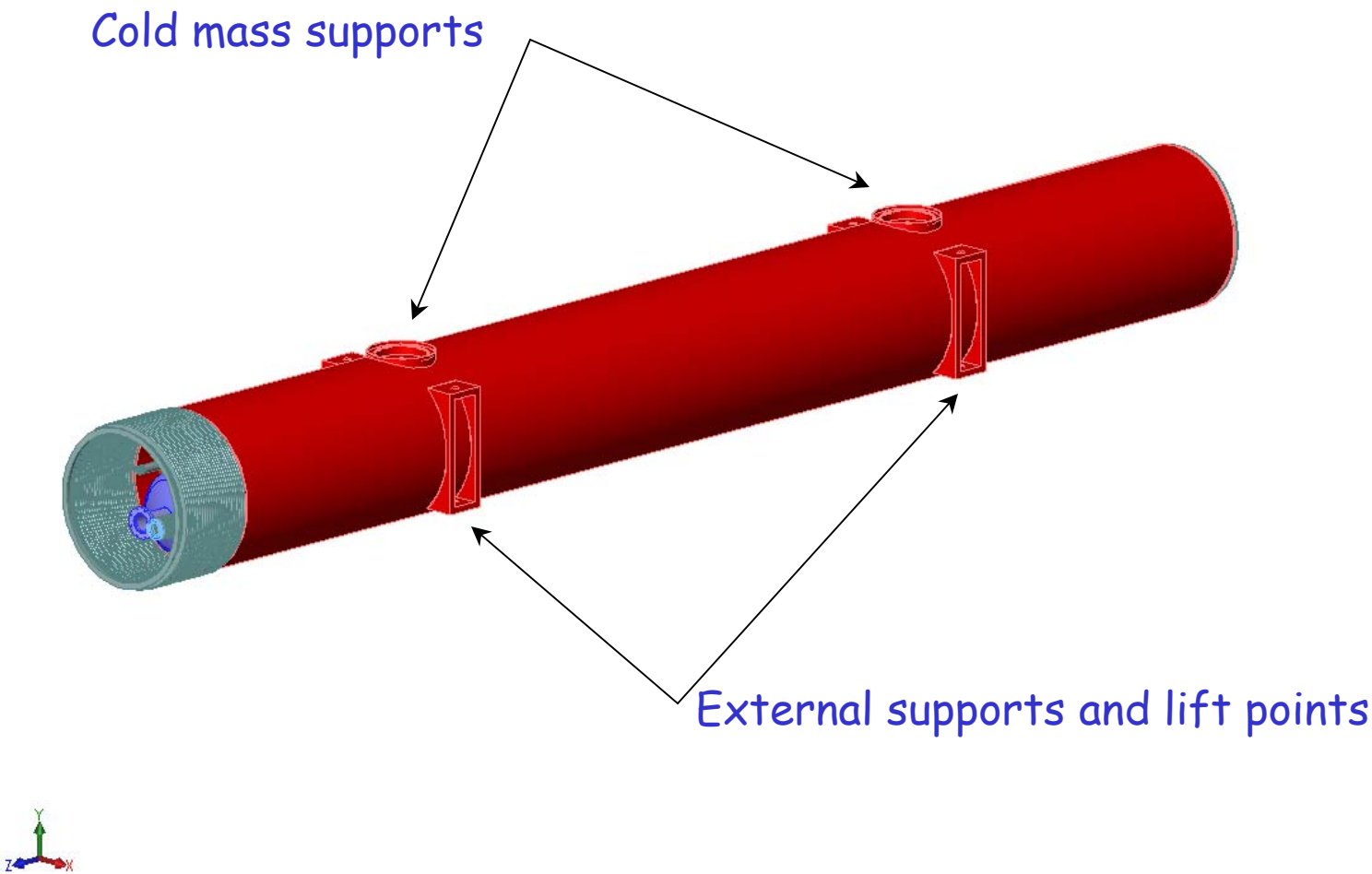

Q2 upstream end

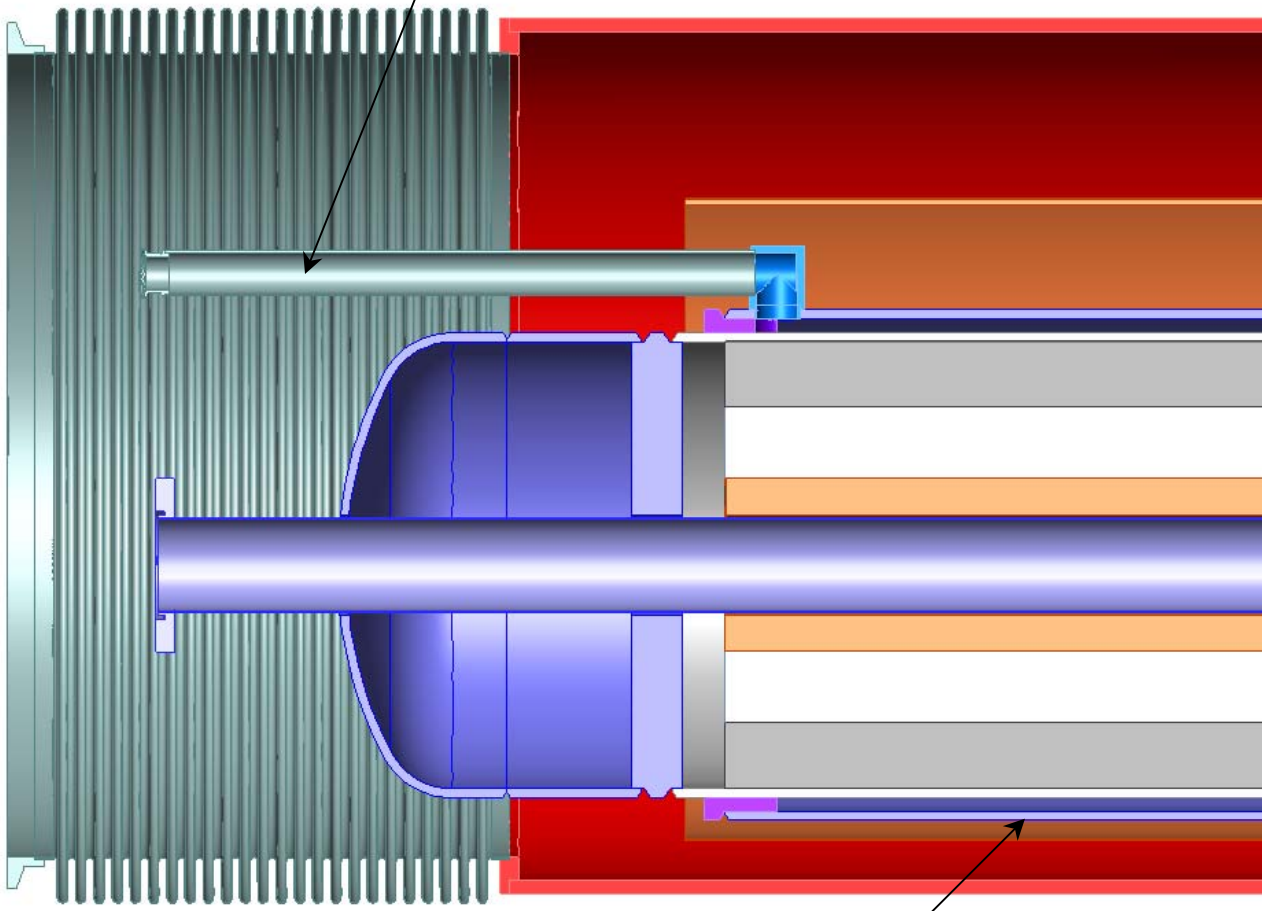

Q2 downstream end

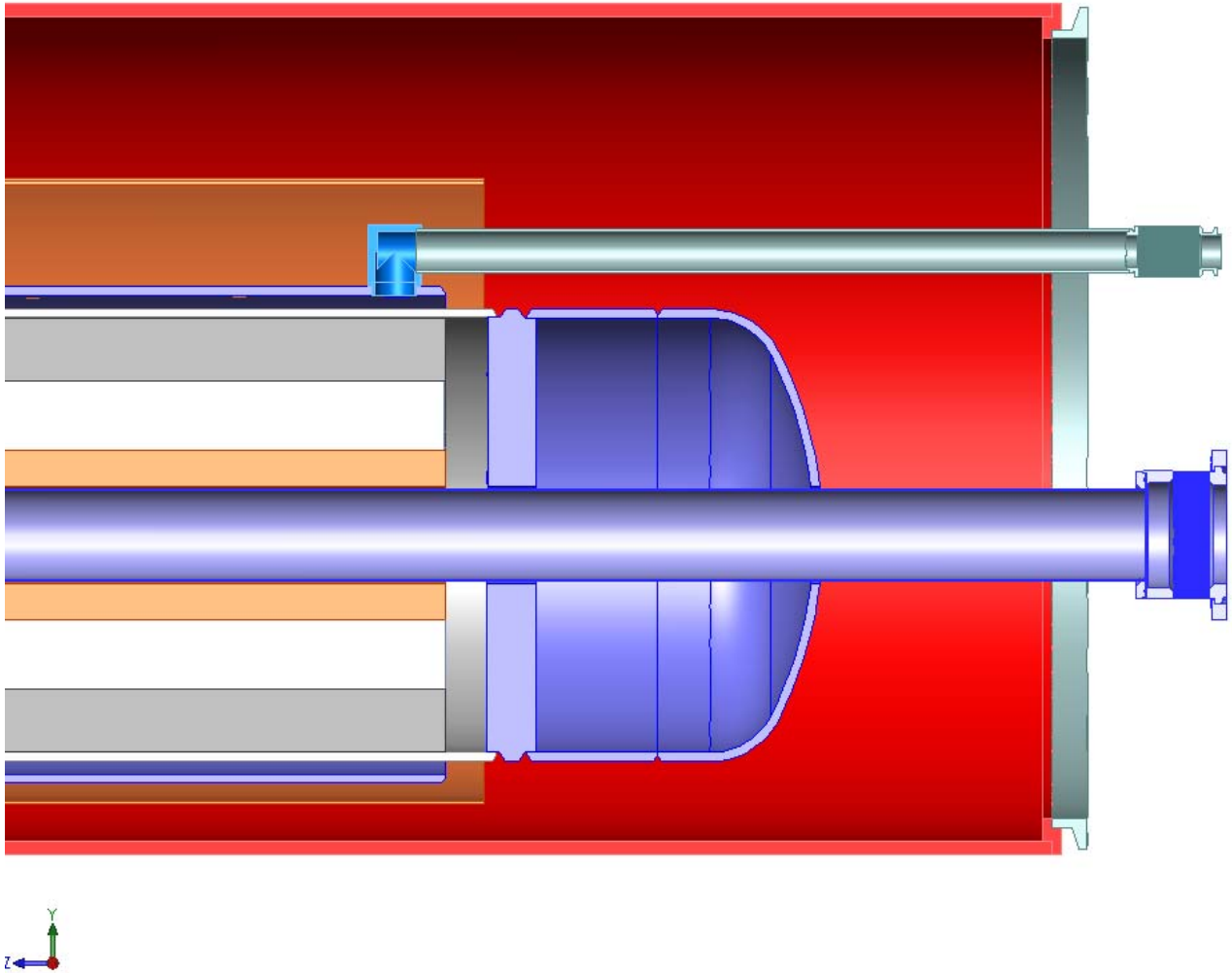
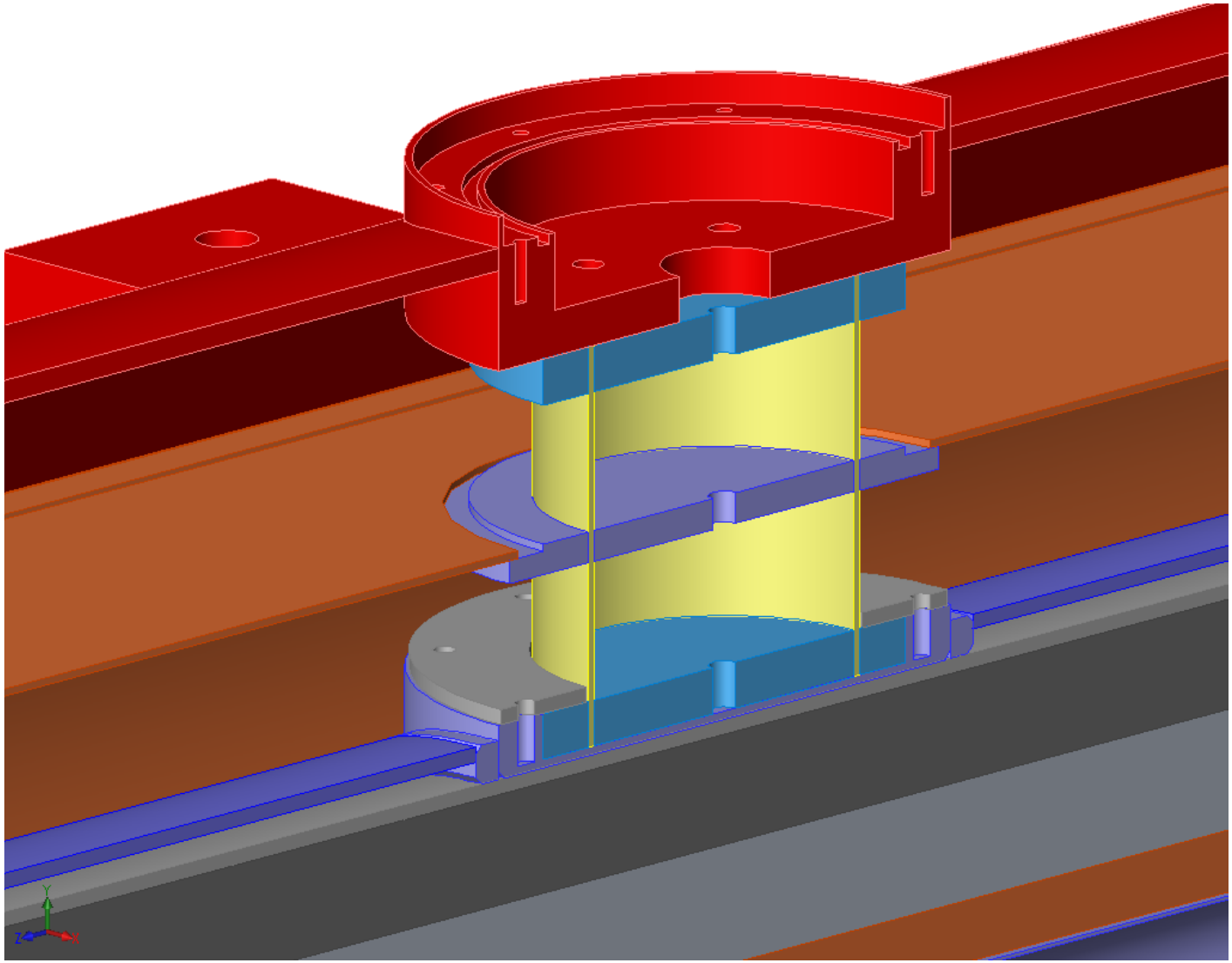
Q2 post to cold mass interface