Structures For High Field Magnets

VLHC magnet workshop

May 24-26, 2000

Shlomo Caspi

Talk Outline

- Structure for a 14 T magnet - RD3
  - Assembly and pre-stress.
  - Analysis and test results of a 1/3 scale mechanical model.

Motivation

- Fast assembly and disassembly
- Adequate pre-stress of coil and structure at 14 T.
- Negligible coil movement at 14 T (not like RT1).
- Cold pre-stress > warm pre-stress.
- Extensible to long magnets.
- Reliable instrumentation.

Coil Modules

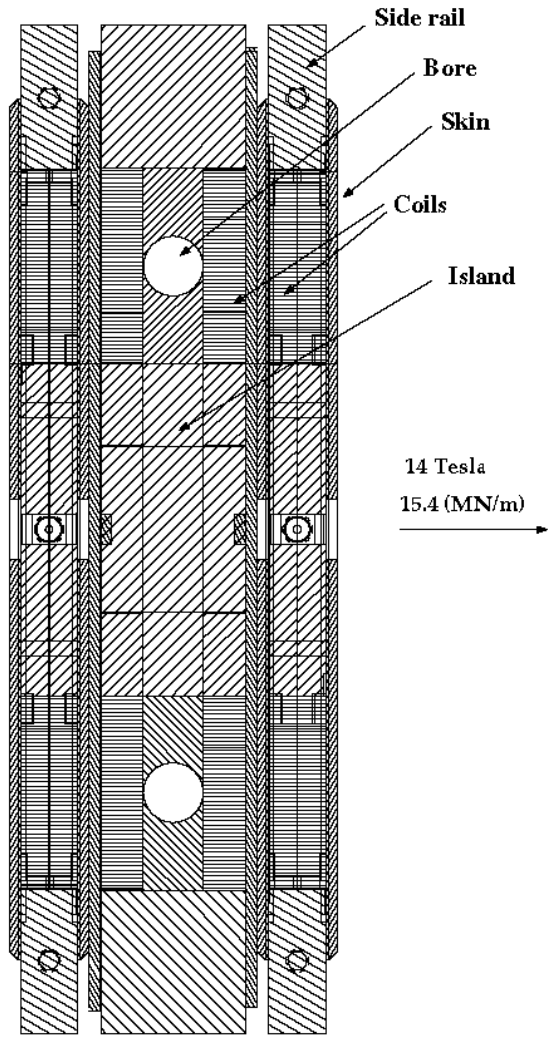

Magnet Assembly

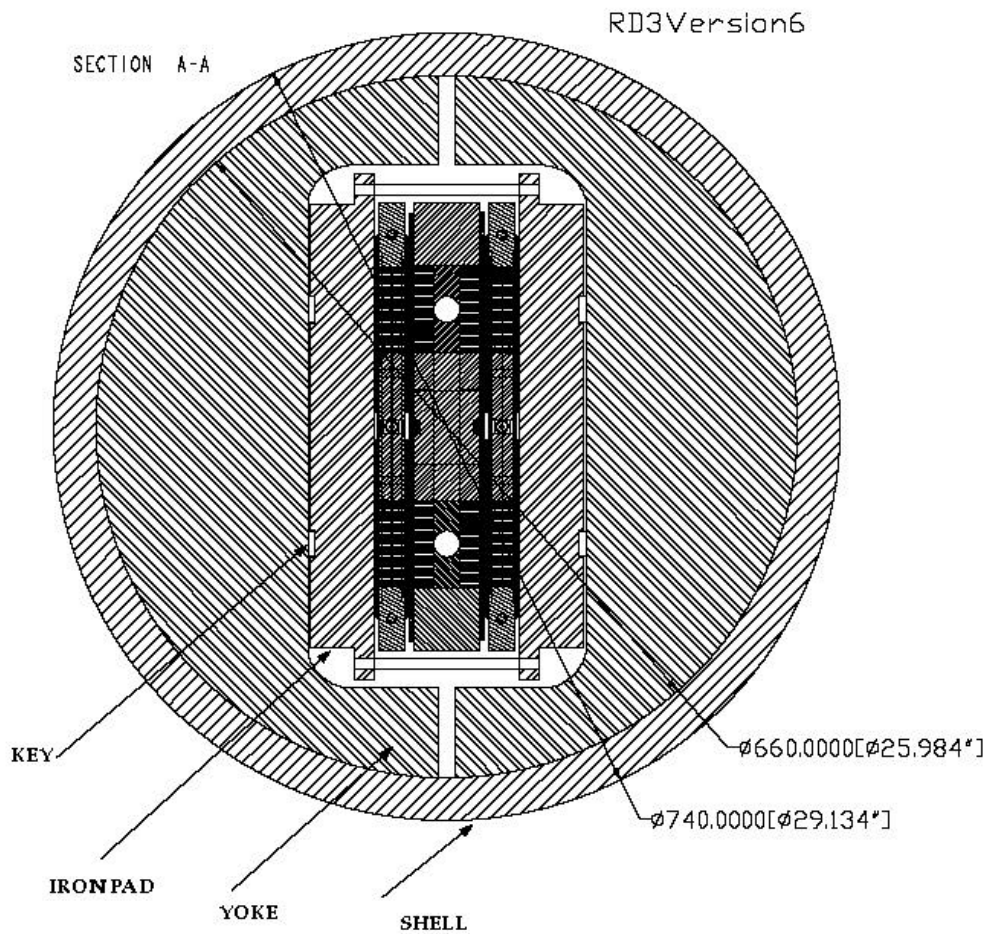

i@lbl.gov

4 steps in magnet assembly

- Insert yoke halves into Aluminum shell.
- Position coil package between yokes.
- Inflate bladder and insert keys.
- Deflate bladder

Bladder

s_caspi@lbl.gov

Bladder Test

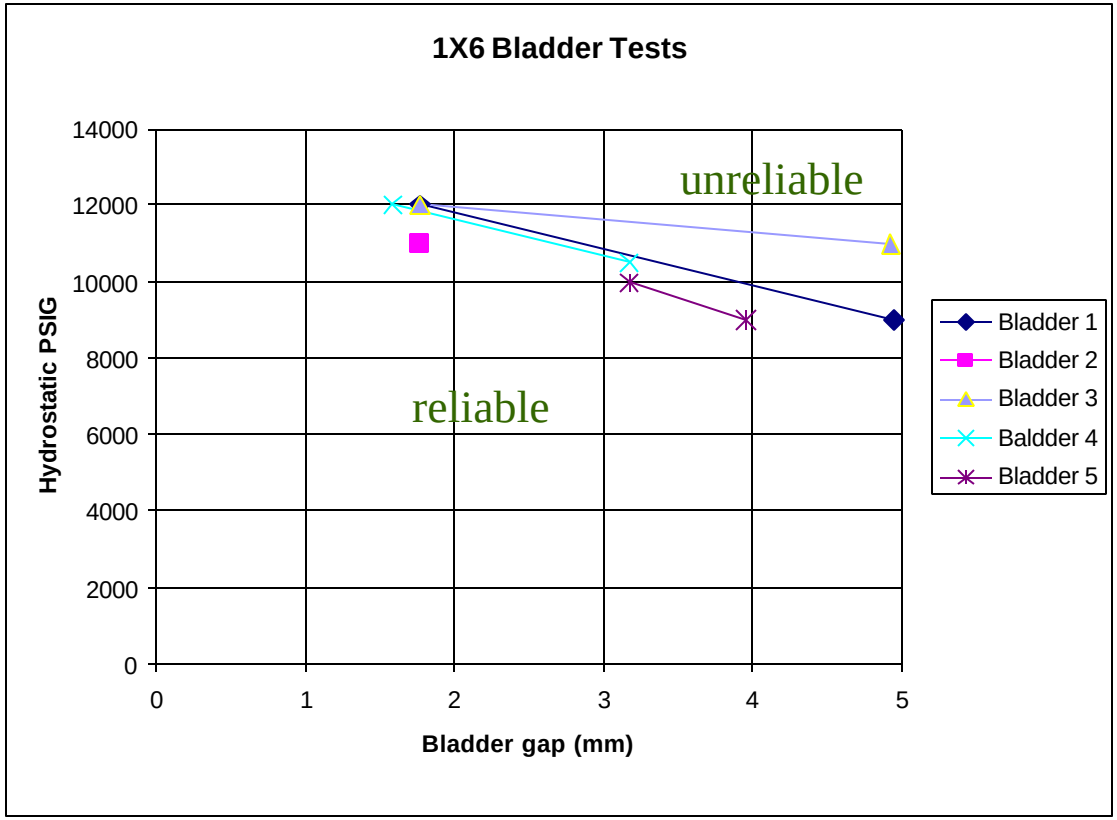

5/22/00

Jump to first page

Bladder Inflated to 85 Mpa

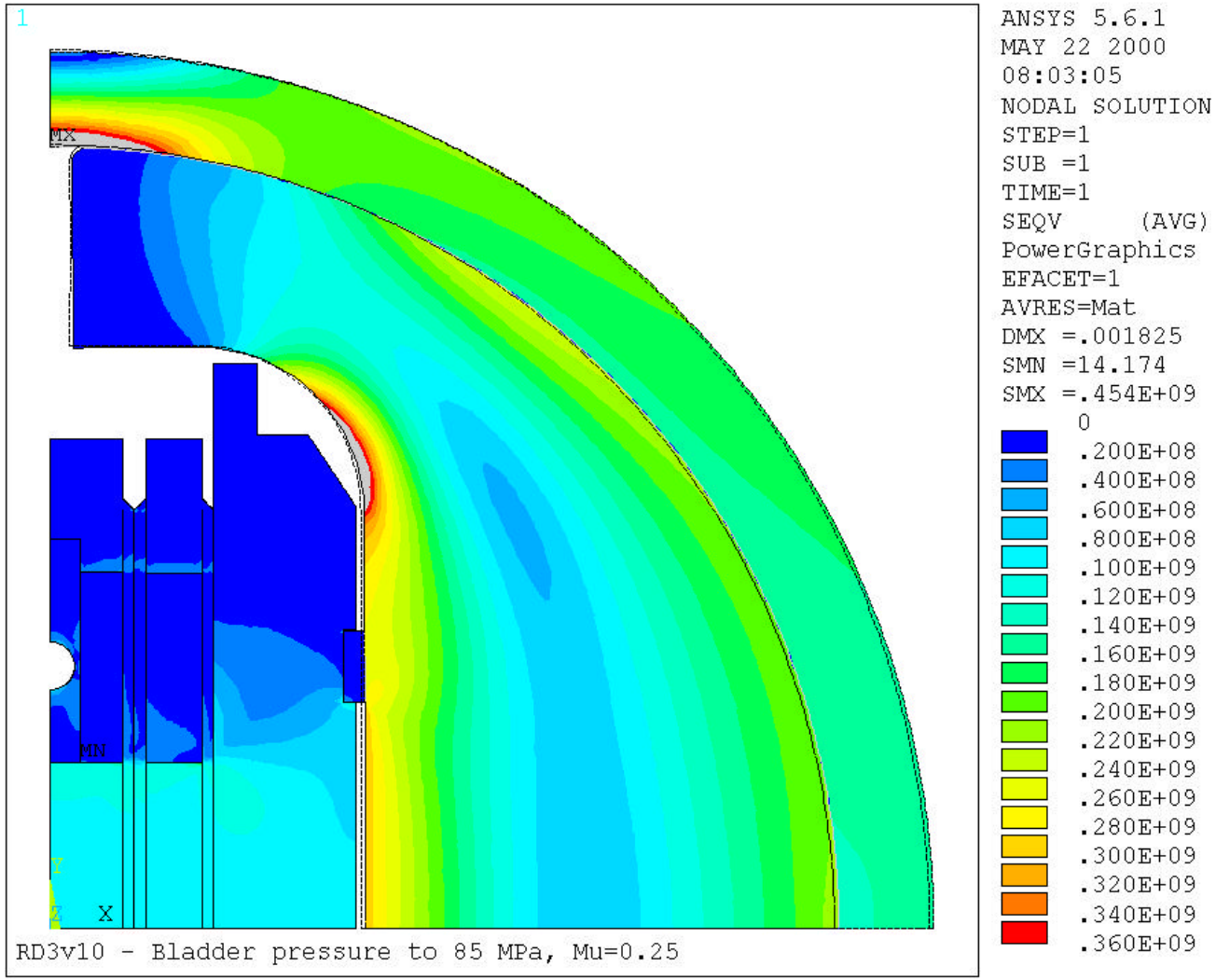

s_caspi@lbl.gov

Key Set

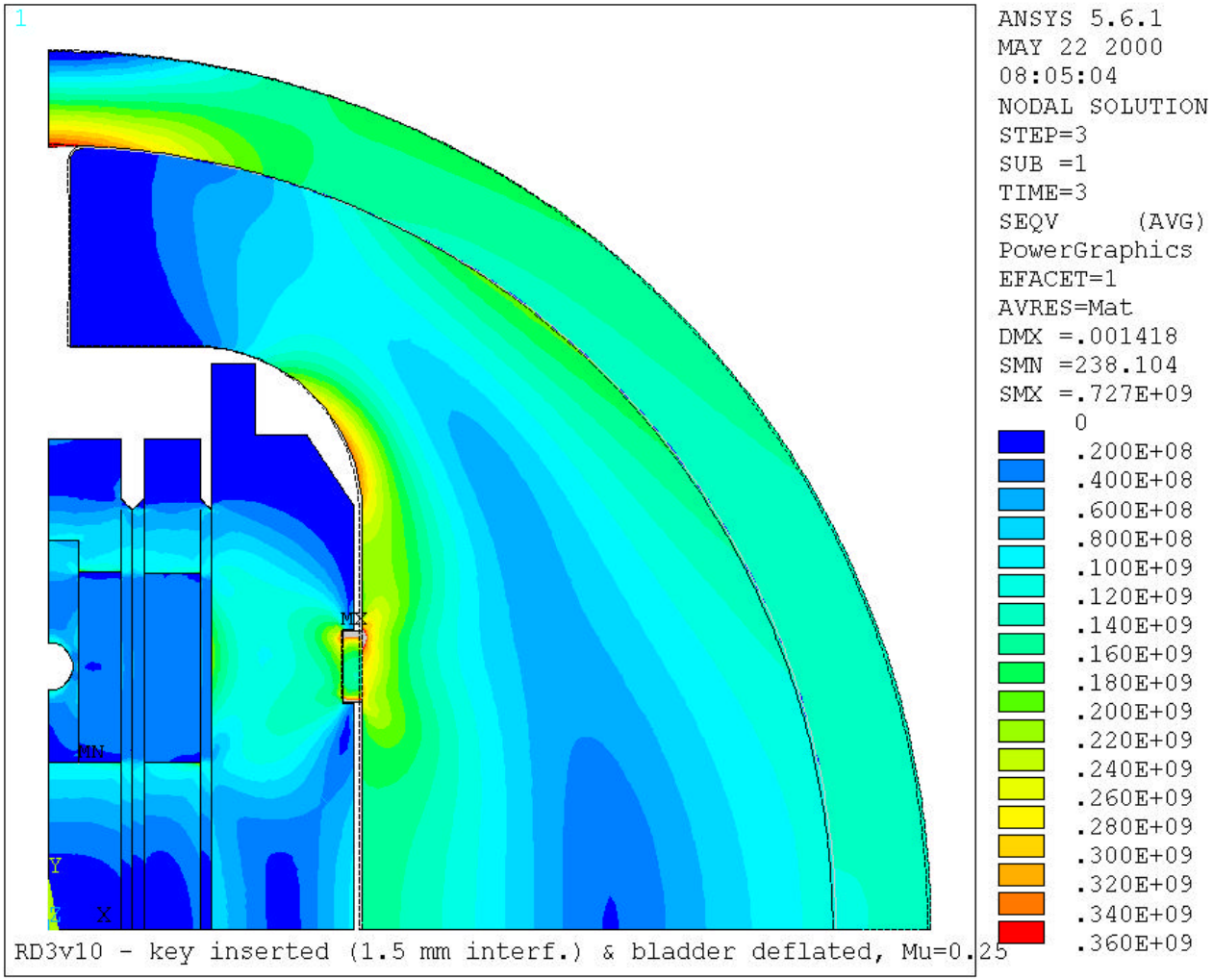
1
MX
MN
Y
X
ANSYS 5.6.1
MAY 22 2000
08:05:04
NODAL SOLUTION
STEP=3
SUB =1
TIME=3
SEQV (AVG)
PowerGraphics
EFACET=1
AVRES=Mat
DMX =.001418
SMN =238.104
SMX =.727E+09
0
.200E+08
.400E+08
.600E+08
.800E+08
.100E+09
.120E+09
.140E+09
.160E+09
.180E+09
.200E+09
.220E+09
.240E+09
.260E+09
.280E+09
.300E+09
.320E+09
.340E+09
.360E+09
RD3v10 - key inserted (1.5 mm interf.) & bladder deflated, Mu=0.25

4.2 K

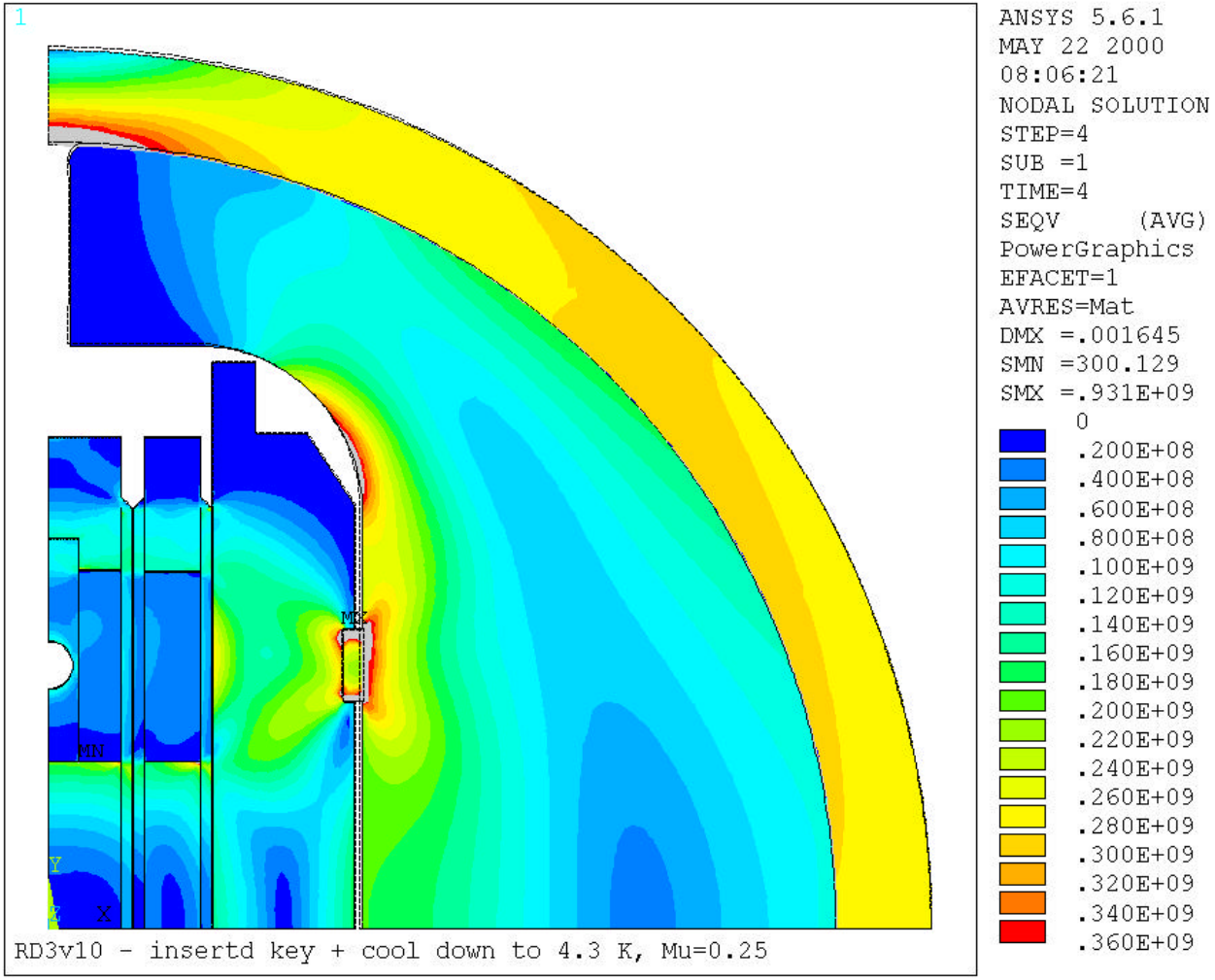
1
MX
MN
Y
X
RD3v10 - insertd key + cool down to 4.3 K, Mu=0.25
ANSYS 5.6.1
MAY 22 2000
08:06:21
NODAL SOLUTION
STEP=4
SUB =1
TIME=4
SEQV (AVG)
PowerGraphics
EFACET=1
AVRES=Mat
DMX =.001645
SMN =300.129
SMX =.931E+09
0
.200E+08
.400E+08
.600E+08
.800E+08
.100E+09
.120E+09
.140E+09
.160E+09
.180E+09
.200E+09
.220E+09
.240E+09
.260E+09
.280E+09
.300E+09
.320E+09
.340E+09
.360E+09

14 Tesla

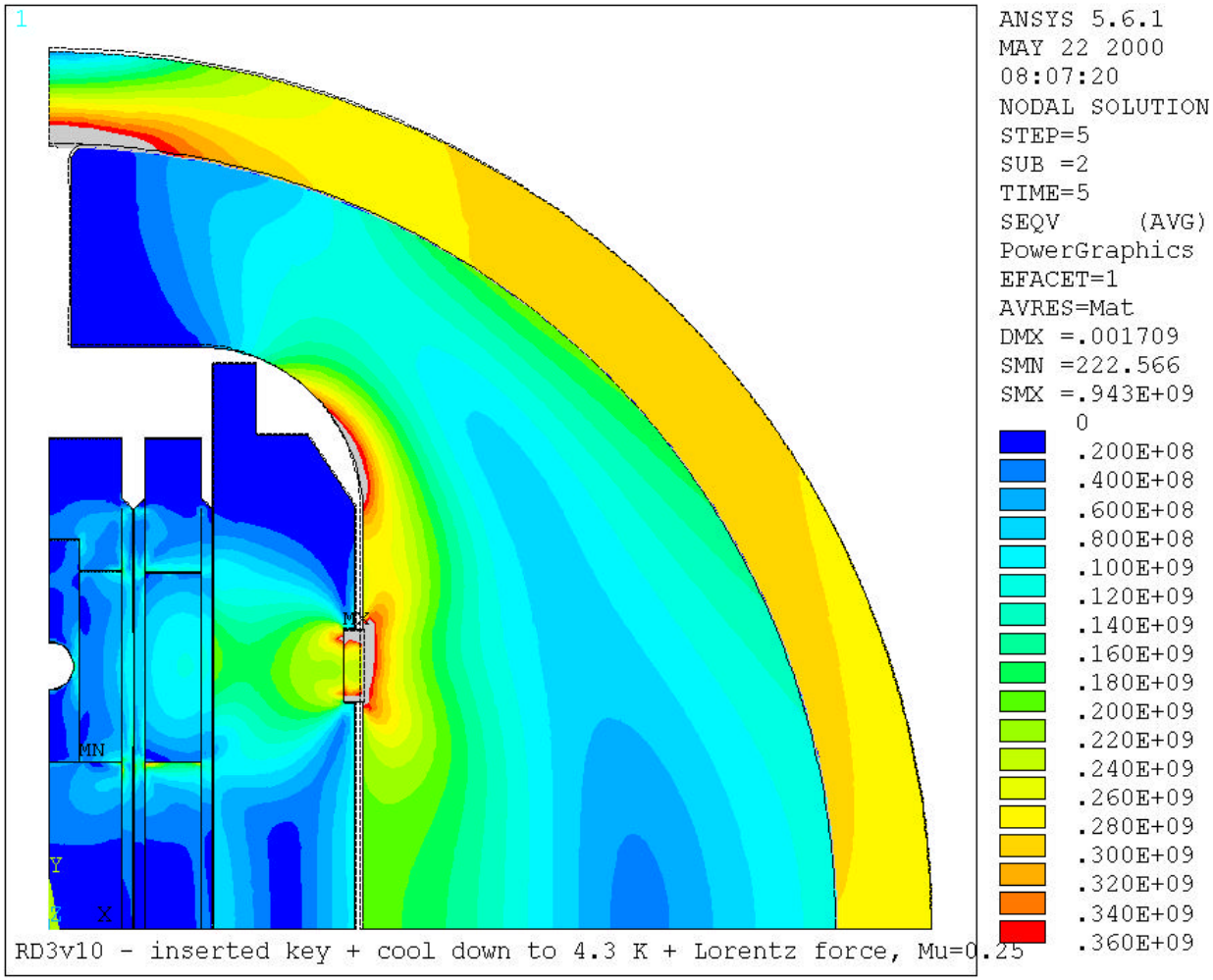
1
MX
MN
Y
X
RD3v10 - inserted key + cool down to 4.3 K + Lorentz force, Mu=0.25
ANSYS 5.6.1
MAY 22 2000
08:07:20
NODAL SOLUTION
STEP=5
SUB =2
TIME=5
SEQV (AVG)
PowerGraphics
EFACET=1
AVRES=Mat
DMX =.001709
SMN =222.566
SMX =.943E+09
0
.200E+08
.400E+08
.600E+08
.800E+08
.100E+09
.120E+09
.140E+09
.160E+09
.180E+09
.200E+09
.220E+09
.240E+09
.260E+09
.280E+09
.300E+09
.320E+09
.340E+09
.360E+09

RD-3 Parameters

- Main coil spacing 25 mm
- Quench field at 4.2 K 14.1 T
- Peak field, inner layer 14.75 T
- Peak field, outer layer 10.15 T
- Quench current 10.4 kA*
- Number of coil layers 3
- Straight section length 500 mm

*No strain correction

- Number of turns (half magnet) 50+49+49
- Height of each coil 80 mm
- Minimum coil bend radius 70 mm
- Vertical bore spacing 220 mm
- Yoke outer diameter 660 mm
- Shell 40 mm
- Shell OD 740 mm

1/3 Scale Mechanical Model

Comparison with Analysis

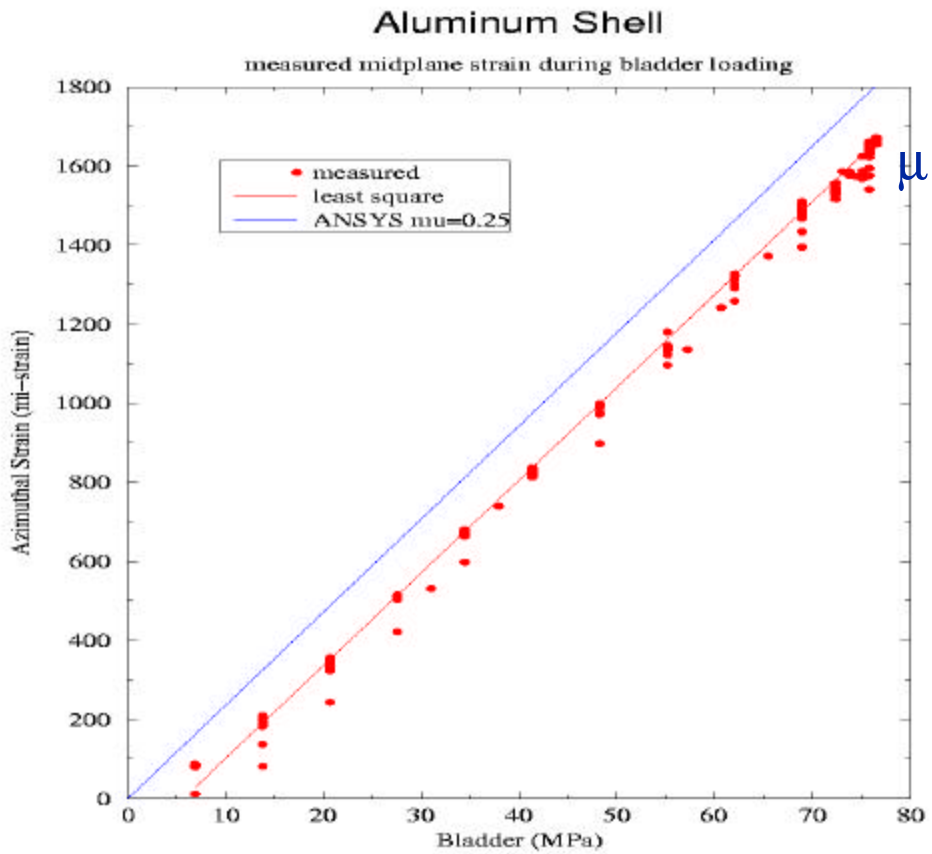

$\mu = 0.25$

Symmetry

Midplane Azimuthal- showing left right symmetry

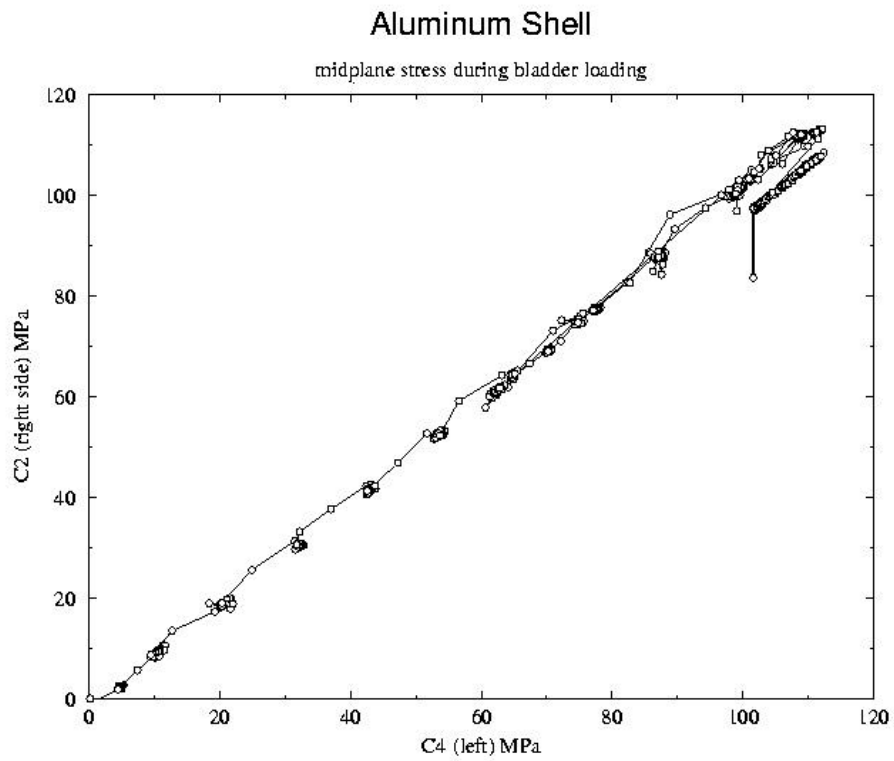

5/22/00

Jump to first page

Stress on coil

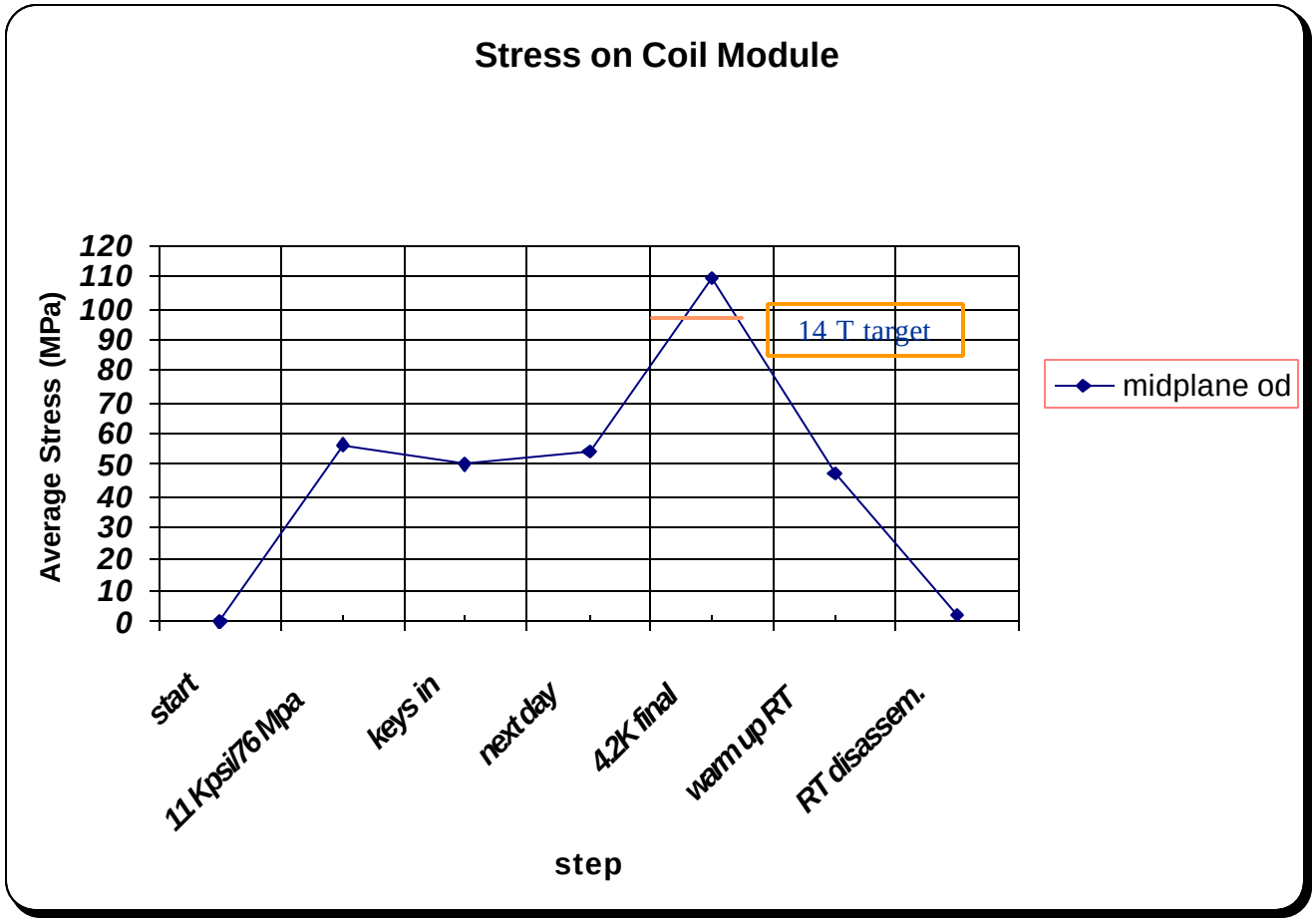

Shell Stress

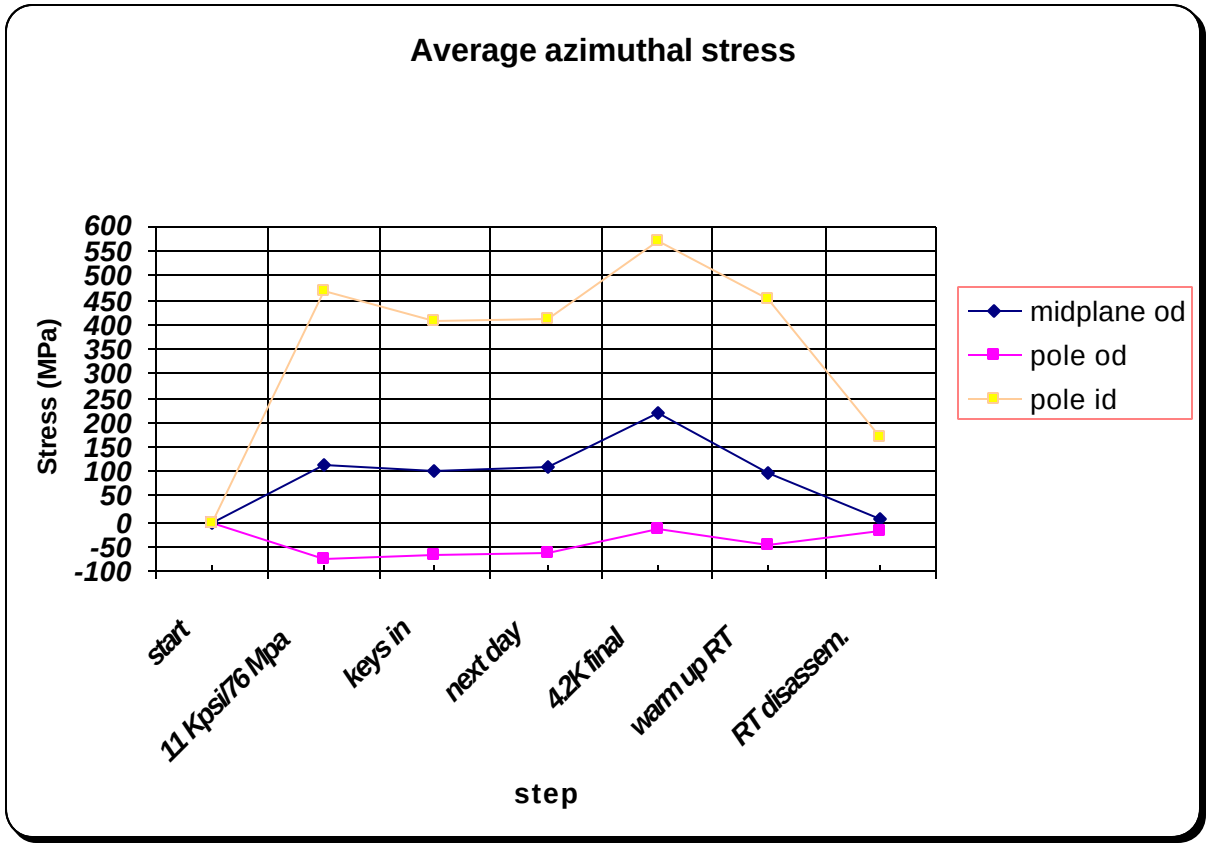

5/22/00

Jump to first page

Key Size

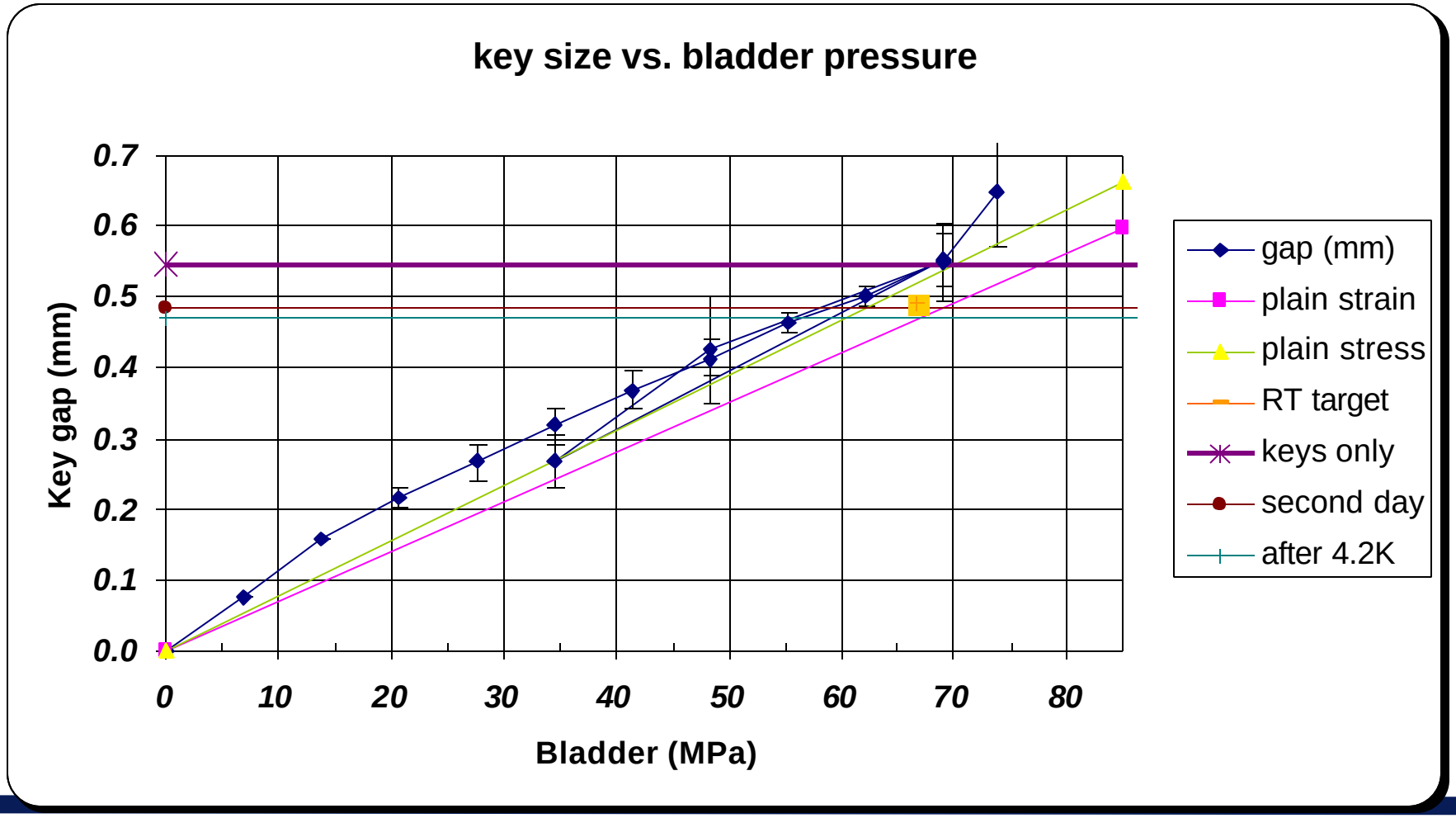
key size vs. bladder pressure
Key gap (mm)
0.7
0.6
0.5
0.4
0.3
0.2
0.1
0.0
0
10
20
30
40
50
60
70
80
Bladder (MPa)
gap (mm)
plain strain
plain stress
RT target
keys only
second day
after 4.2K

conclusion

- Stress control during assembly.
- No coil separation.
- Straight forward instrumentation.
- Fields up to 20 T, with similar structure.
- Low cost